BRAND NEW

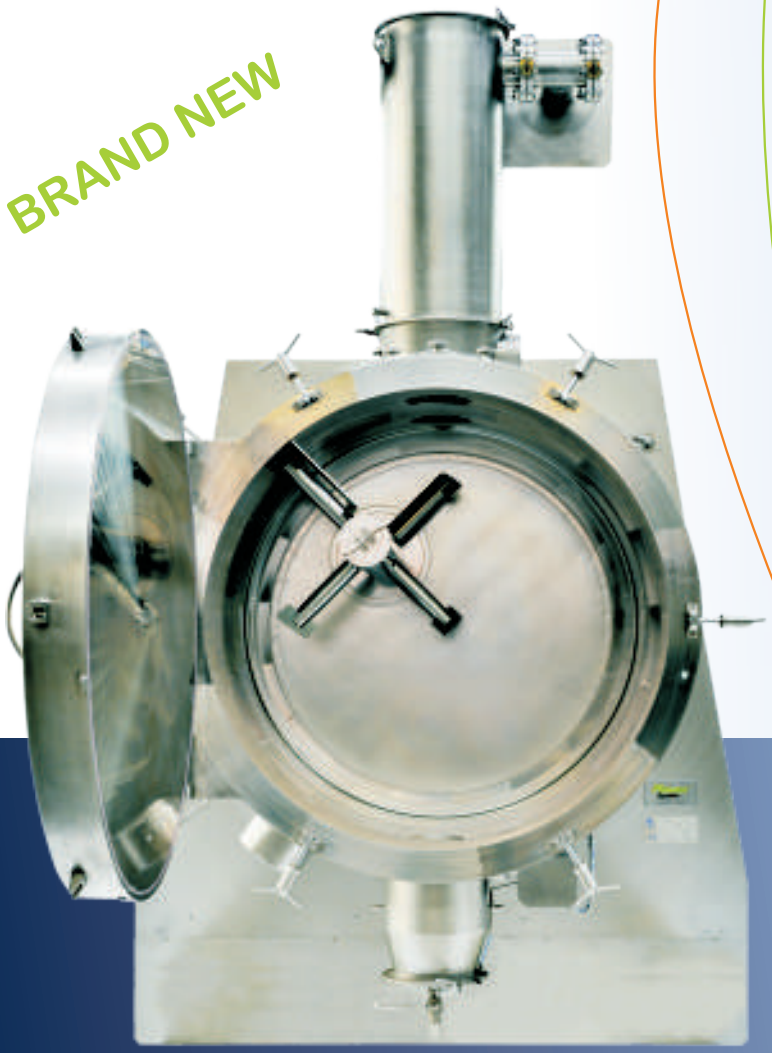

Planex System

Patented Horizontal Paddle Vacuum Dryer

italvacuum

PLANEX System

New Patented Horizontal Paddle Vacuum Dryer

Time for new rules in vacuum drying

Planex System® (Patent N° US 5,857,264) is a **new concept** multi product paddle vacuum dryer, studied and developed by Italvacuum in order to overcome the peculiar limits of the traditional paddle vacuum systems that are equipped with concentric agitator.

Planex System® is based on an innovative philosophy of working, especially suitable for vacuum drying of wet powders obtained from centrifuge or filter press and it is directed to **Active Pharmaceutical ingredients**, **Fine Chemicals** and **Intermediates** treatment.

Planex System® consists of a fixed cylindrical chamber with an **eccentric agitator** inside **with two independent movements**, able to rotate on its own axis and tangentially to the cylindrical chamber as well. The **double combined rotation** allows an optimal mixing of the product, continuously renewing the surface of the mass exposed to evaporation, covering all the volume of the vessel. In this way solvents release is facilitated and drying times are significantly reduced compared to conventional systems.

The two movements of the agitator, axial and planetary, can either be clockwise or anticlockwise. Besides, every movement combination can be achieved (even not synchronous).

The peculiar configuration of the agitator, characterized by a diameter much smaller than the one of the drying chamber, and the double rotation not only allow the continuous revolution of the product but also limit the mechanical and thermal stress, preventing local overheating due to friction. This enables to treat even more delicate and thermo sensitive products, as it preserves their purity, avoiding degradation of the dried batch.

It must be remarked that the mechanical stress on the product is about three times less than the one obtained with traditional dryers that are equipped with concentric agitator. Consequently the overheating of the product, deriving from mechanical action, results considerably lower[1].

Furthermore the reduced gap between the agitator profile and the wall of the drying chamber avoids deposition of the product and makes the unloading operation extremely easy and effective, being also foreseen a specific program automatically managed.

Planex System® is **absolutely safe** for the personnel, the environment and the product, being designed and manufactured in compliance with the ever more severe **cGMP** and **ATEX rules**.

Multi patented in Europe and abroad

[1] Analysys of "Politecnico di Torino" - Department of Material Science and Chemical Engineering

Advantages

1. Absolute safety for the personnel, the environment and the product according to cGMP rules
2. Perfect homogeneity and uniformity of the dried batch, obtained through the controlled action of the agitator that enables a full revolution of the product, avoiding overheating and degradation
3. Mechanical and thermal stress is three times less compared to traditional dryers (provided with concentric agitator)
4. Easy and complete unloading of the product thanks to:
   a) profile of the eccentric agitator
   b) reduced gap between the agitator profile and the wall of the drying chamber (less than 2 mm)
   c) specific unloading program managed through PLC
5. Reduced drying times thanks to the double combined rotation of the inner agitator that increases the product surface submitted to evaporation
6. Possibility to adjust the speed of the two independent movements of the agitator in both directions (clockwise / anticlockwise) through frequency converters, in order to adapt it to the characteristics of the product and the process
7. Reduced power consumption
8. Extremely high final vacuum values (under 0.01 mbar) and very low final moisture values
9. Ease of washing thanks to an effective C.I.P. system that enables the liquid to circulate in every point of the drying chamber, allowing to reach residual p.p.m. requirements with very few rinsing operations
10. Ease of inspection to every point of the drying chamber thanks to the configuration of the misaligned agitator and the easy dismantling of its inner parts, that facilitate the SWAB TEST execution
11. Ease of external cleaning thanks to:
    a) the complete outer cladding
    b) the absence of supports of the drying chamber to the floor
    c) the possibility of clean room installation allowing to separate the machine room from the sterile room (Particle Free configuration).
12. FDA validation and approval
13. ATEX certification.

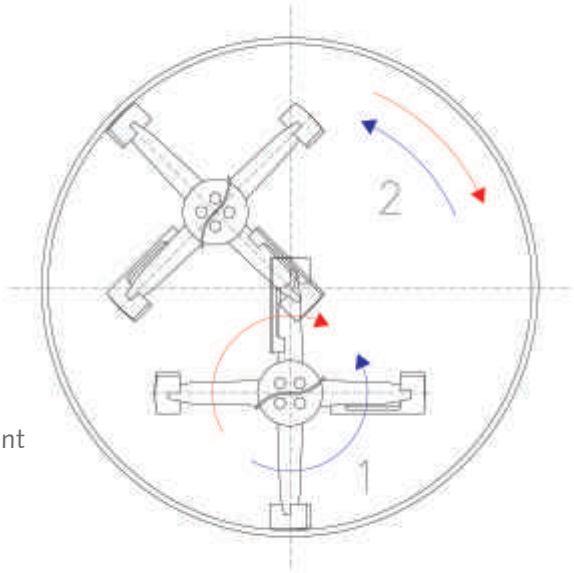

1: Axial movement

2: Planetary movement

Eccentric agitator with double combined rotation

PLANEX System

New Patented Horizontal Paddle Vacuum Dryer

Technical features

For the parts in contact with the product Planex System® is built in stainless steel AISI 316L, but on request it is available in any other weldable metal (for instance ALLOY C-22 and AISI 904L).
The wall of the drying chamber, the back cover, the shaft of the agitator and the front door are heated through diathermic liquid circulation in order to avoid cold areas which could cause solvent condensation or product aggregation.
All the internal surfaces of the drying vessel are mirror polished or electropolished in order to optimise the endurance against corrosion, reduce the adherence and the friction on the product, increasing the flow behaviour of the powders and simplifying the cleaning operations.
The shaft of the agitator is complete with a **double mechanical seal system**, studied to guarantee the perfect vacuum tightness and the absolute purity of the dried batch, avoiding any risk of contamination of the product. The mechanical seal may be of conventional type with wet flushing or run dry with nitrogen immission.

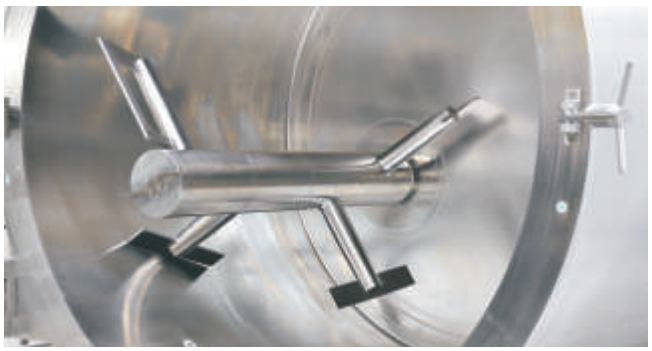

Eccentric agitator profile

Paddles disassembling

SWAB TEST execution

Easiness of cleaning and inspection

The ease of the inner cleaning is granted by an **efficient C.I.P. system**, that allows a complete washing of all the parts in contact with the product, while the big front port makes the inspection simple and practical. Also the **SWAB TEST** execution is facilitated thanks to the profile of the misaligned agitator and the easy dismantling of its inner parts, unlike in the traditional systems where the paddles can not be disassembled.
The exterior of Planex System® can also be easily cleaned as the interior. In fact the sealed external cladding (particle-free configuration cGMP) covers the insulation material, the electric wiring and the hydraulic piping. Besides there is no support frame in the sterile room, but only the drying chamber flanged to the wall. In this way the external cleaning becomes very easy and effective, avoiding accumulation of the product in recessed areas. These features, combined with the partitioning solution, allow **clean room installation**, achieving the pressurization and separation of the sterile room from the machine room.

Clean room installation

Turn-key systems

Beside the Planex System®, Italvacuum provides also all the necessary fittings that complete the plant and that are suitably sized in order to satisfy every process requirement:

- **Heating and cooling group** for the system thermoregulation
- **Condensation vacuum group** with tank for the recovery of extracted solvents and the reduction of drying times
- **Safety external filtering unit** for powders containment (integral part of Planex System®)
- **High vacuum group** (SAURUS939 pump)
- **Control panel with PLC** for the management of operative parameters of the drying process, provided with software which could be certified according to title CFR 21 - Part 11, and able to ensure reproducibility of the dried batch and connectable to centralized supervision systems.

Control panel

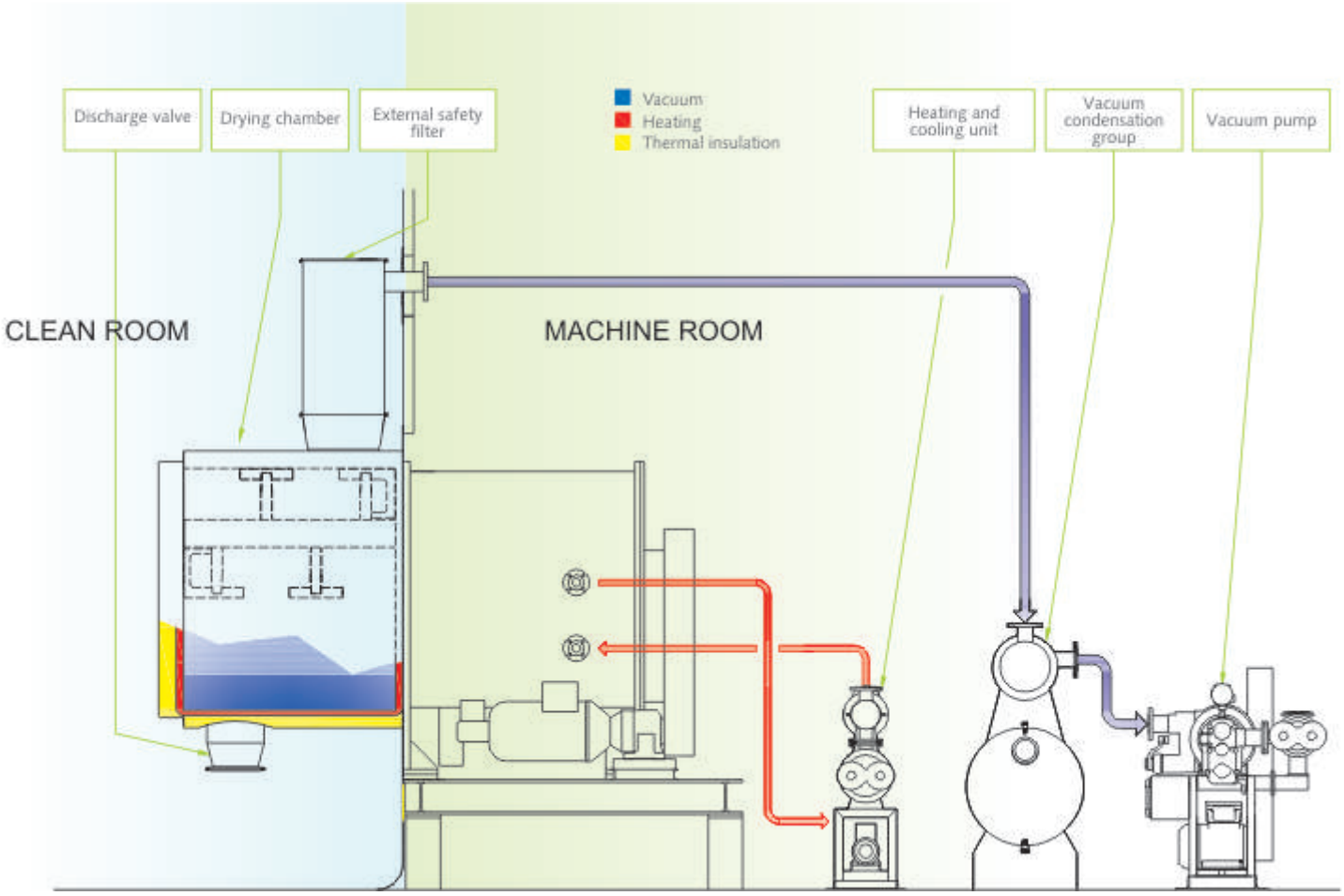

Standard installation diagram of the Planex System® representing the different units realized by Italvacuum

Services

New Patented Horizontal Paddle Vacuum Dryer

From laboratory scale to industry: the best way for an accurate choice of the industrial plant

For drying trials of the customer's products, Italvacuum has a wide range of pilot installations.
During the trials with the pilot installation it is possible to extract some product samples without breaking the vacuum and to vary at any time the process parameters in order to define the ideal drying path.
In this way the customer can make the best choice for the Italvacuum installation both in terms of dimensions and performance. On the other side the personnel of Italvacuum can obtain important information on the product to be dried, in order to adapt the industrial installation to the customer needs.
The tests are completed and formalized by drawing up a detailed report.

The Italvacuum post-sales service: another warranty for your productions

The start-up of the installation is just the beginning of our relation with the customer. This relation will last for years starting with an efficient policy of preventive maintenance with planned interventions. The maintenance plans are organized individually considering the customer's specific processes. This means a remarkable cost saving and more tranquillity.
At the same time, for the solution of any inconvenient or breakdown, Italvacuum is able to offer prompt and efficient technical assistance services both at the customer's site with the intervention of specialized personnel or from its site through on-line diagnostic, in case the customer's installation has a control system supplied by our company.
For an efficient management of the spare parts, Italvacuum has a computerized warehouse that allows the prompt and immediate delivery of original spare parts anywhere in the world.
Moreover, Italvacuum can fully overhaul its own used plants and regularly supports the customer in upgrading the delivered installations with new technical solutions that have been developed in the meantime - as well as adapting the machines to the new ATEX regulations.

Integrated quality - Italvacuum has implemented a Quality Management System with **ISO 9001** certification covering from design to production of every single component, from end product sale to plant installation and technical assistance. In addition, acknowledging the importance of the welding process in the qualitative result and the reliability of the end product, ITALVACUUM has considered to certify its own processes and personnel complying to **ISO 3834-2** norms.

SINCERT
Sistema di gestione per la qualità certificato
IIS
UNI EN ISO 9001

SINCERT
Requisiti di qualità per la saldatura certificati
IIS
UNI EN ISO 3834-2

Size configuration

New Patented Horizontal Paddle Vacuum Dryer

Planex System® presents a **high loading flexibility**. It is manufactured with total volumes ranging from 300 to 4.400 litres. The loading capacity is function of the treated product and it can vary from 15% to 80% of the vessel volume. Both small and big batches can be treated, covering all the requirements of the chemical and pharmaceutical industries.

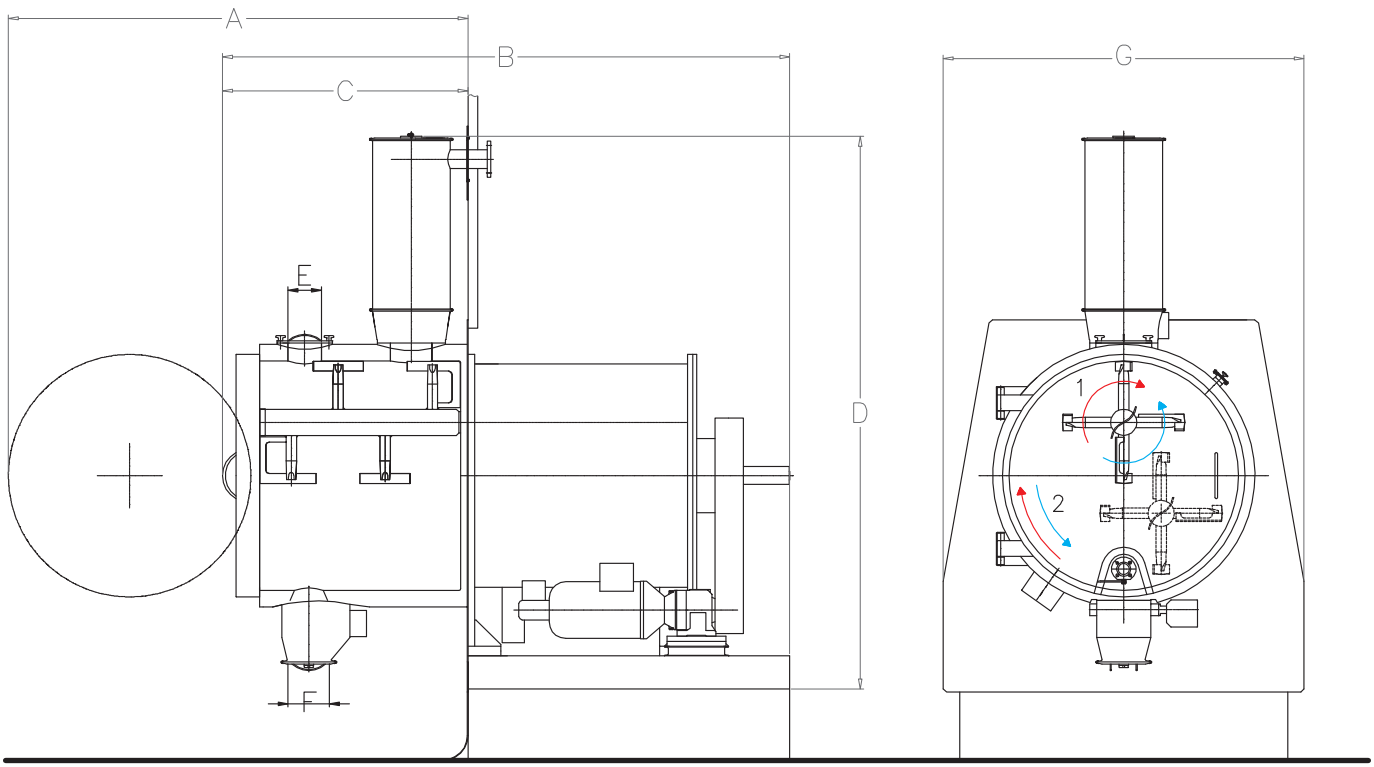

PLANEX System		PX 300	PX 800	PX 1200	PX 1800	PX 2400	PX 3200	PX 4400
Total volume	(l)	300	800	1200	1800	2400	3200	4400
A	(mm)	1620	2190	2495	2850	3145	3460	3850
B	(mm)	2105	2740	3115	3460	3795	4170	4650
C	(mm)	865	1170	1330	1495	1690	1860	2050
D	(mm)	1985	2590	3035	3370	3780	4000	4840
E	(mm)	125	150	200	200	250	250	300
F	(mm)	150	200	250	250	300	300	350
G	(mm)	1225	1620	1885	2200	2360	2595	2800

The information provided in this catalogue have an exclusive general purpose and are indicative. Images do not refer necessarily to products in standard conditions. ITALVACUUM Srl reserves the right to make modifications periodically and at any time to details or characteristics of the described product for technical or other reasons . This catalogue is printed for its distribution all over the world. Printed in Italy - ITV01

Vacuum Process Innovations since 1939

ITALVACUUM Srl

Via Stroppiana, 3 - 10071 Borgaro T.se (TO) - Italy

Tel. +39 011 470 46 51 - Fax +39 011 470 10 10

marketing@italvacuum.com - www.italvacuum.com

www.planexsystem.it