DIN Reactors
CE 1600 – 40000 Litres

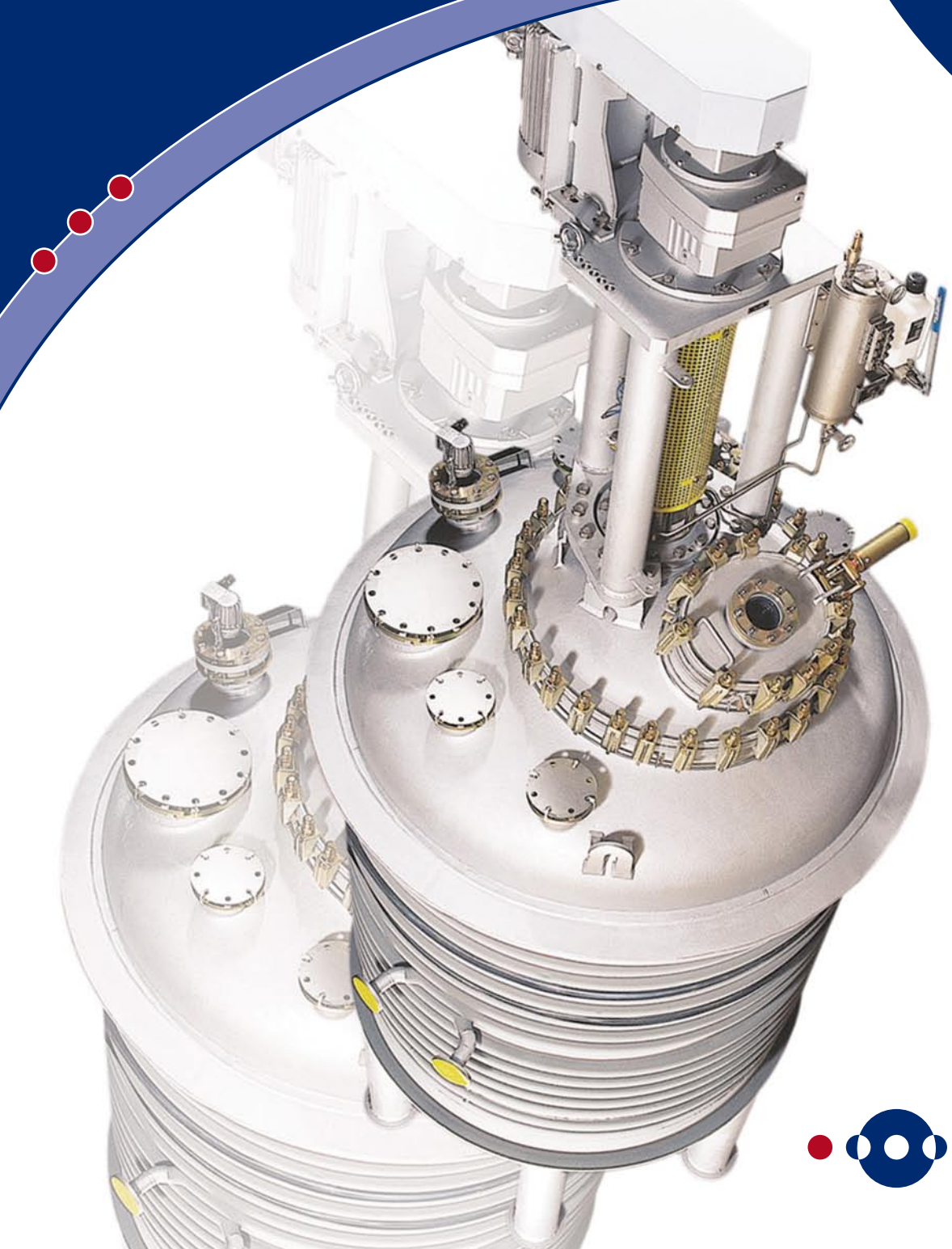

THALE

Reactor Type CE 1600 – 40000 Litres

Standard Design
Pressure: Inner vessel -1/6 bar,
Jacket -1/6 bar
Temperature: -25/+200 °C
Code: AD specifications, ASME

Materials
Vessel: P 275 NH (1.0487)
Glass-lining: RAS GLASS®
Clamp bolts: 24CrMo5, surface-treated
Gaskets: PTFE-enveloped flat seal
according to DIN 28148

Inspection
Water pressure test according
to AD or ASME specification
Glass-lining test according
to DIN 28063
High voltage test 20 kV/12 kV

Construction
Supporting structure: Lugs, feet,
support ring,
special design to order
Shell: Jacket (AM),
Half coil design (HR)

Internals
Drive: DIN drive TRD
with agitator flange according
to DIN 28137,
double mechanical seal with
thermosyphon unit
Agitator: Impeller (DIN 28157),
Turbine (see "Agitator Systems"
information sheet)
Baffle: Baffles, configurations P and S
according to DIN 28146
Probes: Inserted temperature
measuring probe (TS probe),
melted-in dual PT 100 element
(TKE probe), monitoring of glass-lining
and vessel, conductivity measurement
(EBÜ-L probe), MultiTube, sample
extraction, filling level measurement,
pH value measurement

Order Example

RWA CE 2500 – 1600 AM – D 100
Reactor, configuration CE
Nominal capacity 2500 litres
Nominal diameter 1600 mm
Jacketed (AM)
Outlet nozzle, configuration D
according to DIN 28140 Part 2

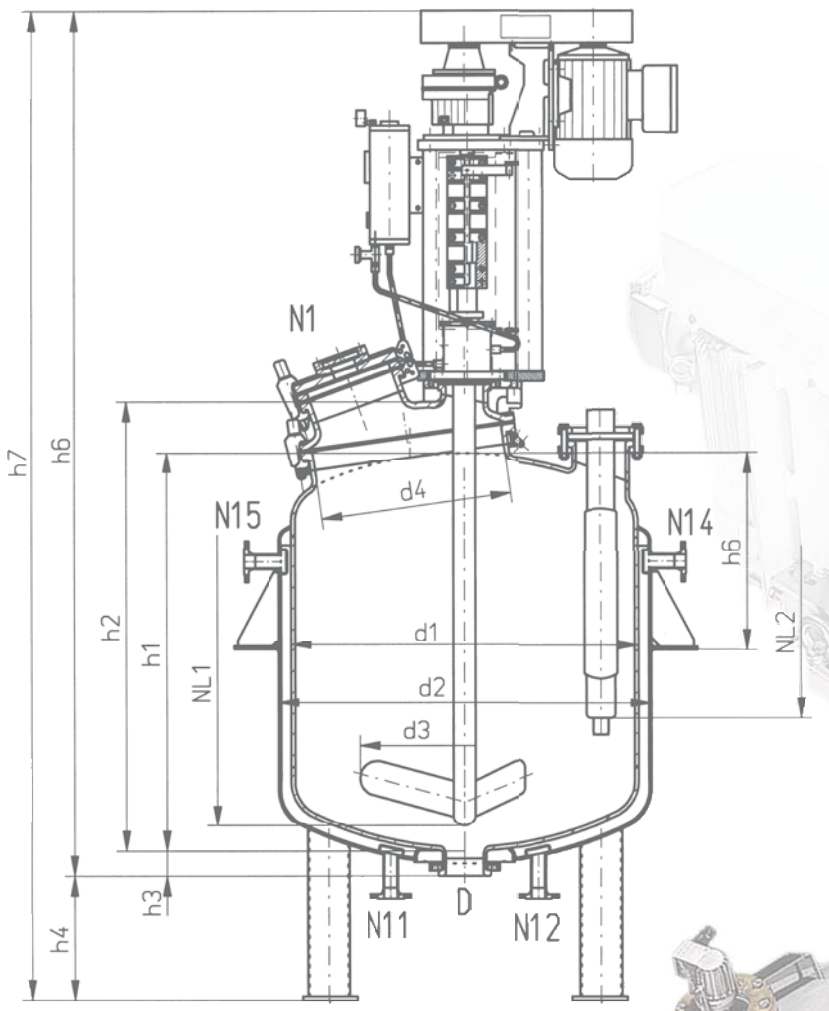

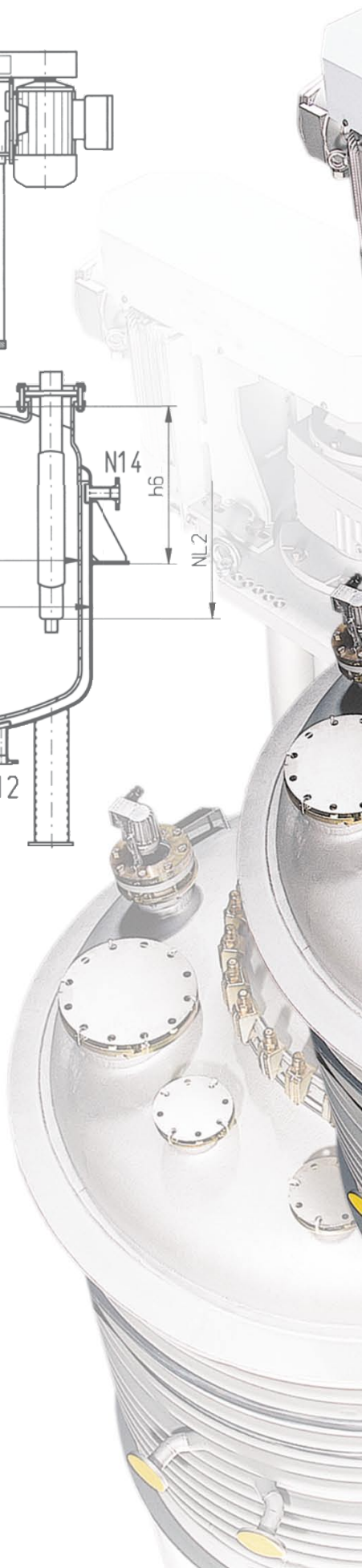

Special design to order
Technical modifications reserved
Edition March 2003

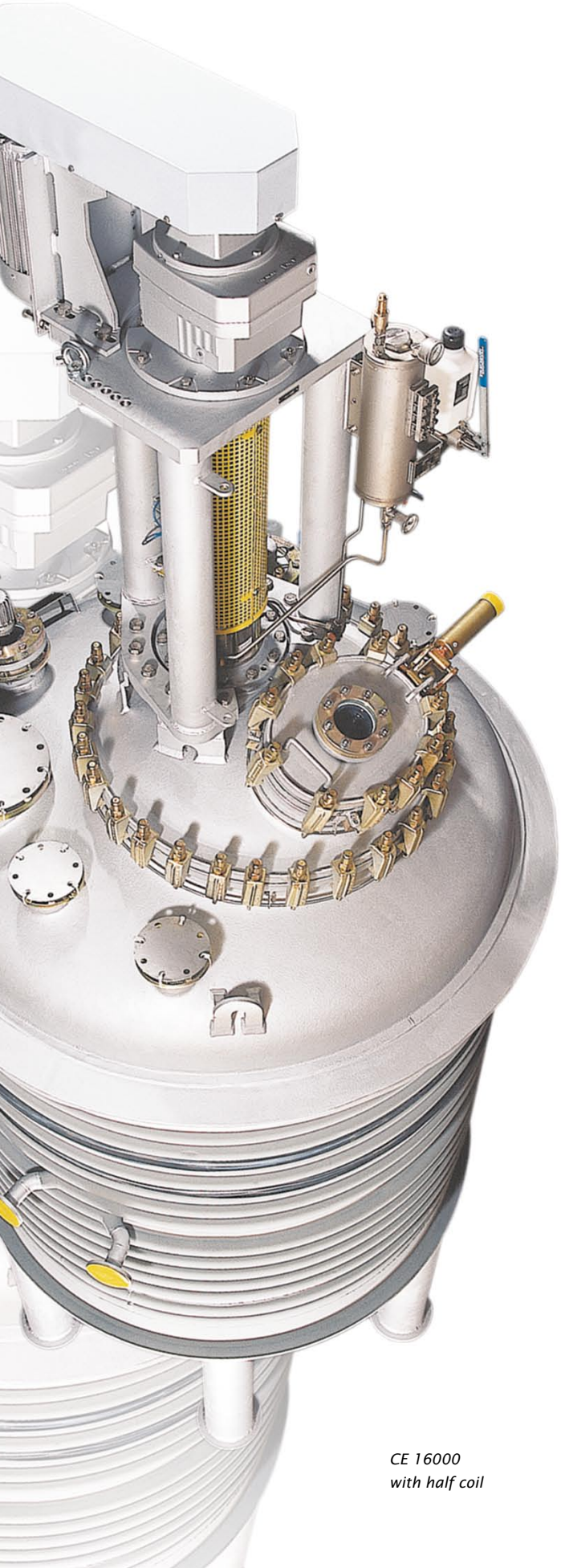

CE 16000
with half coil

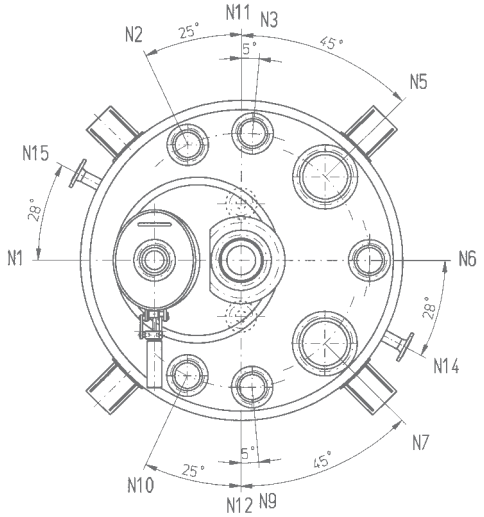

CE 1600 ÷ CE 2500,
1400 ≤ d1 ≤ 1600, plan view

Computer-controlled flame-cutting robots guarantee high-precision synchronous cutting resulting in precise fitting accuracy of neck and nozzles

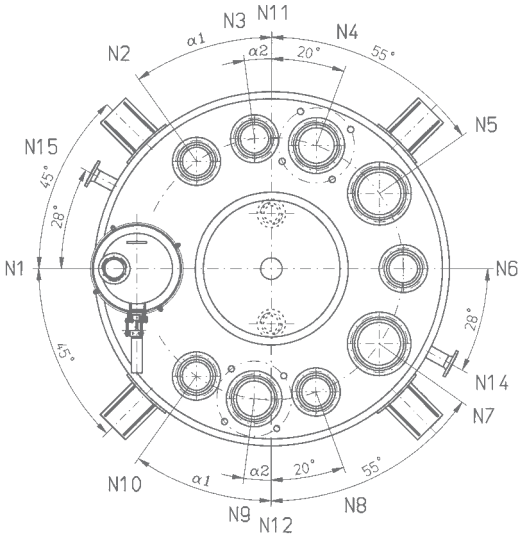

CE 8000 - CE 40000,
2200 ≤ d1 ≤ 3600,
plan view

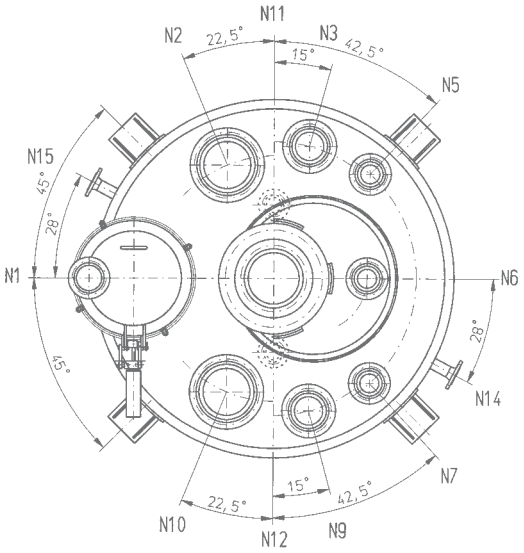

CE 4000,
d1 = 1800, plan view

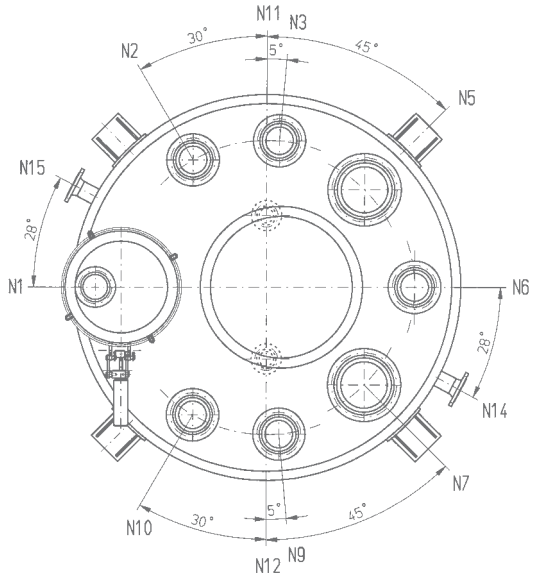

CE 6300,
d1 = 2000, plan view

Our internal grinding machine for bodies, ends and nozzles works entirely automatically. Perfectly ground steel surfaces form the ideal substrate for the glass-lining

Our submerged-arc automatic welding machine does material-friendly welding based on minimal heat effect for up to 100 m of weld seams per unit

Thale Email – The number one in experience and tradition with the composite material glass/steel

Thale-bottom outlet valve (TBV)
DN 100/80 with pneumatic diaphragm drive

Dimensions

Nominal capacity	Total capacity		Exchange surface	Main dimensions (mm)											Total weight
	vessel	jacket		d1	d2	d3	d4	h1	h2	h3	h4	h5	h6 *	h7 *	
l	l	l	m^2										approx.	approx.	kg
1600	2035	310	6,5	1400	1500	840	770	1611	1800	74	500	633	3460 (3770)	3960 (4270)	3100
2500	3105	390	8,6	1600	1700	960	770	1859	2060	72	500	708	3835 (4145)	4335 (4645)	4000
4000	4910	525	12	1800	1900	1100	770	2297	2500	70	500	783	4510 (4875)	5010 (5345)	5600
6300	7570	705	16,6	2000	2100	1100	770	2840	3050	86	500	895	5175 (5510)	5675 (6010)	7900
8000	9320	750	18	2200	2300	1100	770	3000	3200	86	500	1110	5325 (5660)	5825 (6160)	8700
10000	11715	875	20,7	2400	2500	1300	965	3180	3400	84	500	1175	5925 (6205)	6425 (6705)	10550
12500	14300	1050	25,2	2400	2500	1300	965	3780	4000	84	500	1200	6565 (6845)	7065 (7345)	12800
16000	18160	1145	29,5	2600	2700	1350	965	4080	4300	82	500	1285	6935 (7215)	7435 (7715)	16700
16000	18200	1170	30,1	2800	2900	1500	1160	3705	3950	82	500	1350	6585 (6865)	7085 (7365)	16900
20000	22680	1345	34	2800	2900	1500	1160	4385	4630	82	500	1400	7325 (7606)	7825 (8105)	17900
25000	28280	1520	39,7	2800	2900	1500	1160	5235	5480	82	500	-	8225 (8505)	8725 (9005)	21100
25000	28310	1550	40,5	3000	3100	1600	1160	4755	5000	80	500	-	7740 (8020)	8240 (8520)	21350
32000	36600	2695	45,4	3200	3350	1600	1350	5280	5550	80	500	-	8655 (8940)	9155 (9440)	28400
32000	36670	2750	46,2	3400	3550	1700	1350	4875	5150	80	500	-	8255 (8540)	8755 (9040)	29800
40000	44650	3285	55,2	3400	3550	1700	1350	5795	6070	80	500	-	9250 (9535)	9750 (10035)	33000
40000	44700	3320	55,6	3600	3750	1800	1350	5365	5640	80	500	-	8820 (9105)	9320 (9605)	33590

** Dimensions in brackets are valid for drive type S*

Nominal capacity	Nozzles (DN)														Drive		
	N1	N2 N10	N3 N9	N4 N8	N5 N7	N6	N11 N14	N12 N15	D	NL1	NL2	α1	α2	α3	total headroom type	Mt max.	Pn
L																Nm	kW
1600	350/450	-	100	-	200	100	50	50	100	2285	1200	-	-	-	300 K (S)	1100	
2500	350/450	100	100	-	200	100	50	50	100	2540	1420	-	-	-	300 K (S)	1100	
4000	500	250	150	-	100	100	50	50	100	2980	1800	-	-	-	400 K (S)	2100	
6300	500	150	150	-	250	150	80	50	100	3595	2320	-	-	-	500 K (S)	2100	
8000	500	150	150	150	300	150	80	80	150	3745	2500	40°	12,5°	28°	500 K (S)	2100	
10000	500	200	200/250	250/200	300	200	80	80	150	4040	2500	35°	7,5°	28°	700 K (S)	6000	
12500	500	200	200/250	250/200	300	200	80	80	150	4640	3100	35°	7,5°	28°	700 K (S)	6000	
16000	500	200	200/250	250/200	300	200	80	80	150	4940	3400	35°	7,5°	62°	700 K (S)	6000	
16000	500	200	200/300	300/200	400	200	80	80	150	4585	3100	40°	12,5°	62°	700 K (S)	6000	
20000	500	200	200/300	300/200	400	200	80	80	150	5265	3700	40°	12,5°	62°	700 K (S)	6000	
25000	500	200	200/300	300/200	400	200	80	80	150	6115	4550	40°	12,5°	62°	700 K (S)	6000	
25000	600	200	200/300	300/200	400	200	80	80	150	5635	4000	40°	12,5°	62°	700 K (S)	6000	
32000	600	200	200/400	400/200	400	200	100	100	150	6255	4500	40°	12,5°	62°	900 K (S)	9100	
32000	600	200	200/400	400/200	400	200	100	100	150	5850	4000	40°	12,5°	62°	900 K (S)	9100	
40000	600	200	200/400	400/200	400	200	100	100	150	6770	4900	40°	12,5°	62°	900 K (S)	9100	
40000	600	200	200/400	400/200	400	200	100	100	150	6340	4500	40°	12,5°	62°	900 K (S)	9100	

Tolerances acc. to DIN 28006 – part 2

We would like to advice you regarding the advantages of glass lined equipment like:

- Glass lined reactors acc. to DIN 28136
- Glass lined Pharma Reactors
- Comonents for pharmaceutical and high purity applications
- Mixing technology for pharmaceutical and chamical industry
- Reactors for Polymerization
- Storage Tanks and Receivers
- Columns
- Heat Exchangers
- Sensor technology
- Accessories

www.thaletec.com

THALETEC ALL AROUND SERVICE

24-h-Hotline:
+ 49 (0) 39 47 / 778 111

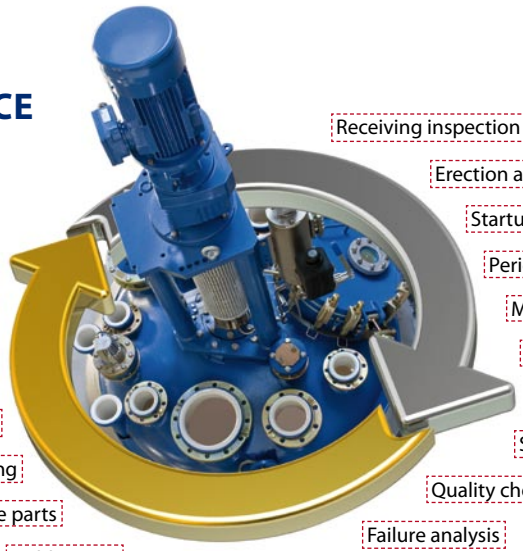

Receiving inspection
Erection and Installation
Startups
Periodic inspections
Maintenance
Galss repairs
Retrofit
Service contracts
Quality checks
Failure analysis
Process optimization
Field servies
Spare parts
Reglassing
Seminars and trainings
Disassemblies
Used equipment

THALETEC GmbH

Steinbachstraße 3
D - 06502 Thale

Telephone:
+ 49 (0) 3947-778 0
Facsimile:
+ 49 (0) 3947 778 110

service@thaletec.com
www.thaletec.com

THALE

k006 02E 02/2011