DIN Reactors
BE 630 – 40000 Litres

THALE

Reactor Type BE 630 – 40000 Litres

Standard Design
Pressure: Inner vessel -1/6 bar,
Jacket -1/6 bar
Temperature: -25/+200 °C
Code: AD specifications, ASME

Materials
Vessel: P 275 NH (1.0487)
Glass-lining: RAS GLASS®
Clamp bolts: 24CrMo5, surface-treated
Gaskets: PTFE-enveloped flat seal
according to DIN 28148

Inspection
Water pressure test according
to AD or ASME specification
Glass-lining test according to
DIN 28063
High voltage test 20 kV/12 kV

Construction
Supporting structure: Lugs feet,
support ring,
special design to order
Shell: Jacket (AM),
Half coil design (HR)

Internals
Drive: DIN drive TRD
with agitator flange according
to DIN 28137,
double mechanical seal with
thermosyphon unit
Agitation system: MultiFlex as
impeller, anchor, turbine and special
fittings (see "Agitator Systems"
information sheet)
Baffle: baffles, configurations P and S
according to DIN 28146
Probes: inserted temperature
measuring probe (TS probe),
melted-in dual PT 100 element
(TKE probe), monitoring of glass-lining
and vessel, conductivity measurement
(EBÜ-L probe), MultiTube, sample
extraction, filling level measurement,
pH value measurement

Order Example

RWA BE 6300 – 2000 AM – D 150
Reactor, Type BE
Nominal capacity 6300 litres
Nominal diameter 2000 mm
Jacketed (AM), Outlet nozzle,
configuration D
according to DIN 28140 – part 2

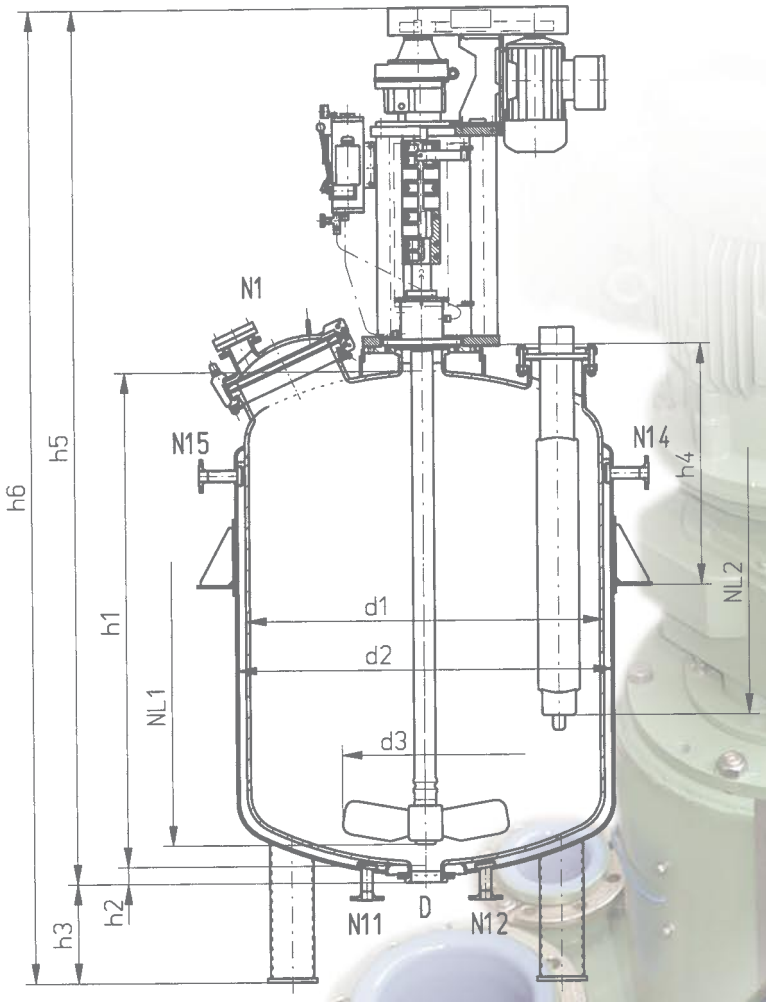

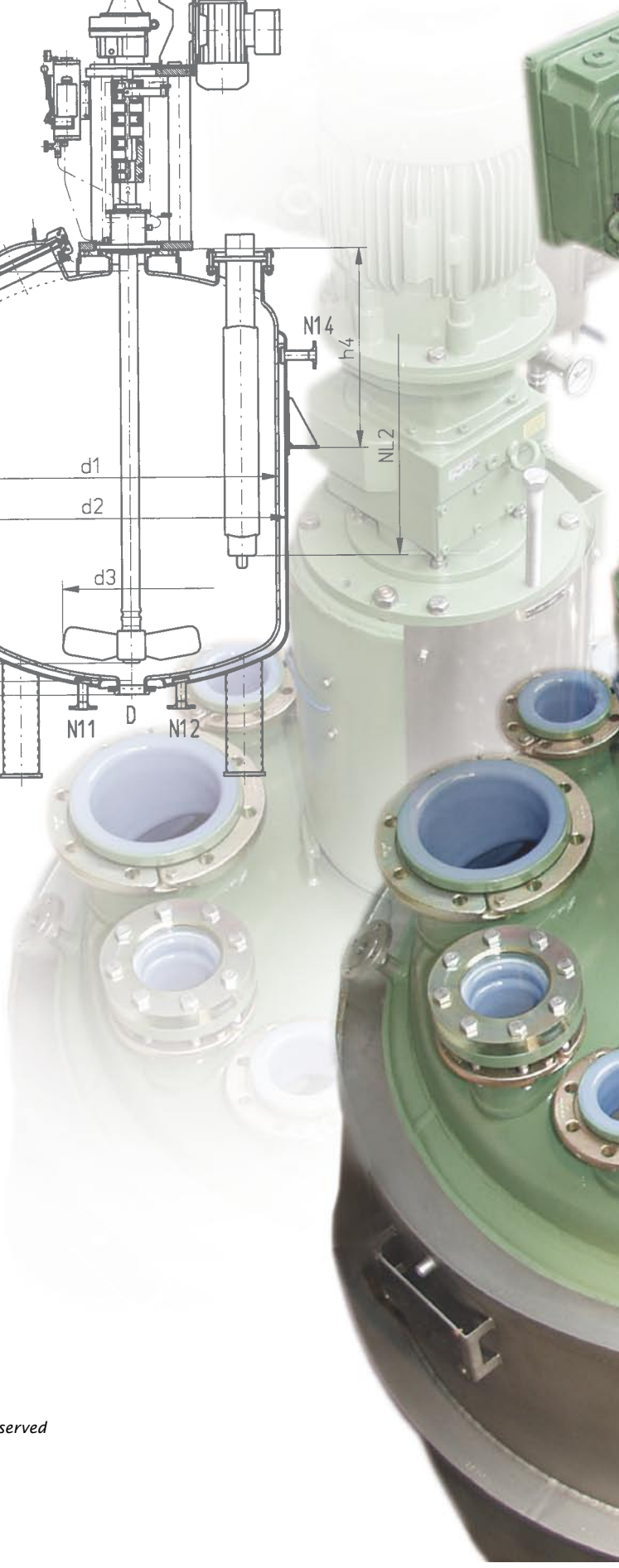

Special design to order
Technical modifications reserved
Edition March 2003

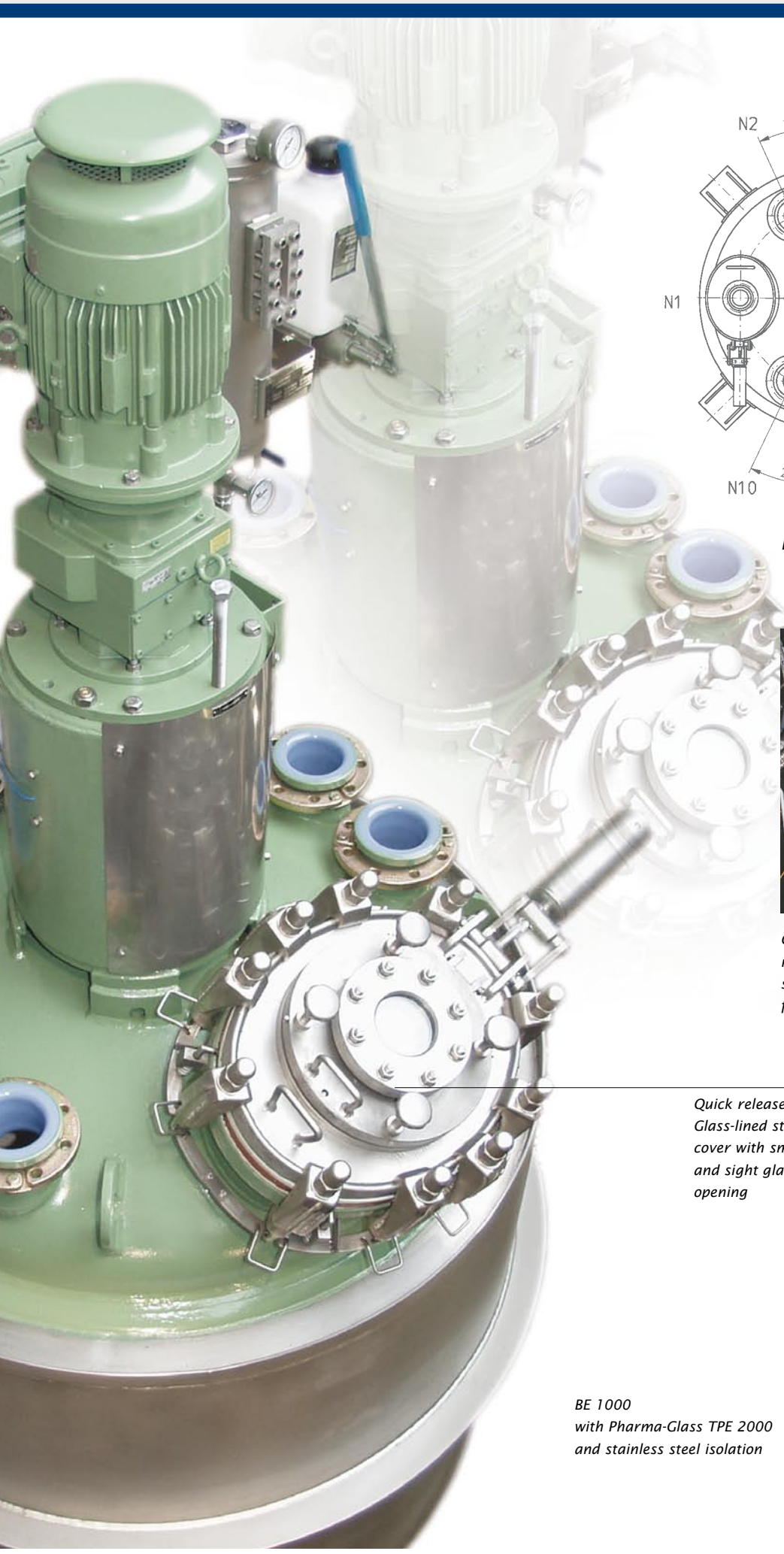

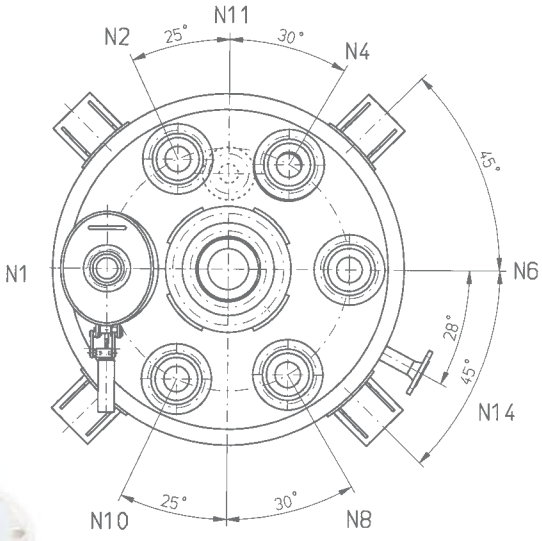

BE 630, plan view

Computer-controlled flame-cutting robots guarantee high-precision synchronous cutting resulting in precise fitting accuracy of neck and nozzles

Quick release cover (QE)
Glass-lined stainless steel cover with small flange and sight glass for rapid opening

BE 1000
with Pharma-Glass TPE 2000
and stainless steel isolation

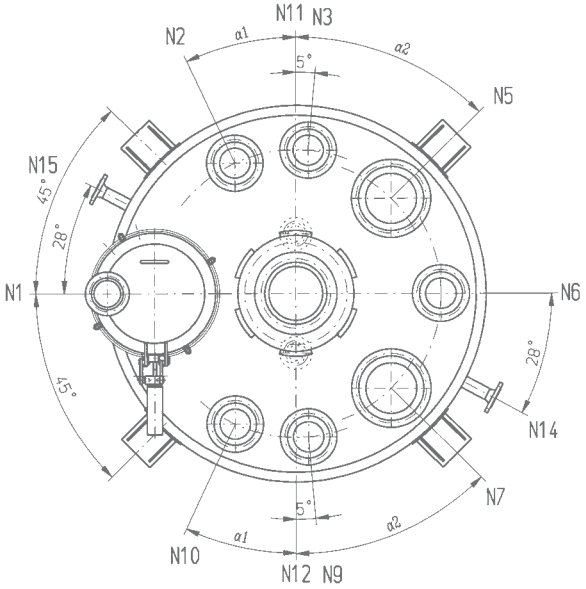

BE 1000 ÷ BE 6300,
1200 ≤ d1 ≤ 2000, plan view

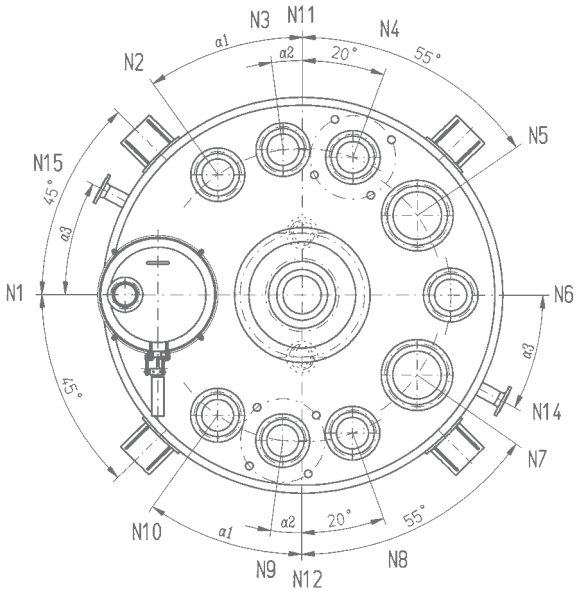

BE 8000 ÷ BE 40000,
2200 ≤ d1 ≤ 3600, plan view

Our internal grinding machine for bodies, ends and nozzles works entirely automatically. Perfectly ground steel surfaces form the ideal substrate for the glass-lining

Our submerged-arc automatic welding machine does material-friendly welding based on minimal heat effect for up to 100 m of weld seams per unit

We equip reactors and vessels with cooling and heating systems to order

Thale-bottom outlet valve (TBV)
DN 100/80 with pneumatic diaphragm drive

Dimensions

Nominal capacity	Total capacity vessel	Total capacity jacket	Exchange surface	Main dimensions (mm) d1	d2	d3	h1	h2	h3	h4	h5	h6	Total weight
l	l	l	m²								approx.	approx.	≈ kg
630	838	164	3,7	1000	1100	650	1310	78	500	650	2778 (-)	3278 (-)	1560
1000	1470	220	5,1	1200	1300	780	1550	76	500	670	3030 (-)	3530 (-)	2200
1600	2330	330	6,9	1400	1500	925	1800	74	500	670	3395 (3705)*	3895 (4205)*	3000
2500	3500	420	9,6	1600	1700	1025	2060	72	500	745	3835 (4145)*	4335 (4645)*	4300
4000	5400	555	13,2	1800	1900	1100	2500	70	500	830	4510 (4845)*	5010 (5346)*	5800
6300	8200	750	17,8	2000	2100	1200	3050	86	500	935	5175 (5510)*	5675 (6010)*	8200
8000	9320	750	18	2200	2300	1200	3000	86	500	1160	5125 (5460)*	5625 (5960)*	9300
10000	11715	875	20,7	2400	2500	1400	3180	84	500	1240	5705 (5985)*	6205 (6485)*	11100
12500	14300	1050	25,2	2400	2500	1400	3780	84	500	1265	6345 (6625)*	6845 (7125)*	13100
16000	18160	1145	29,5	2600	2700	1400	4080	82	500	1350	6715 (6995)*	7215 (7495)*	15850
16000	18200	1170	30,1	2800	2900	1600	3750	82	500	1415	6340 (6620)*	6840 (7120)*	16200
20000	22600	1345	34	2800	2900	1600	4385	82	500	1465	7080 (7360)*	7580 (7860)*	17800
25000	28280	1520	39,7	2800	2900	1600	5235	82	500	-	7980 (8260)*	8480 (8760)*	21000
25000	28310	1550	40,5	3000	3100	1700	4755	80	500	-	7495 (7775)*	7995 (8275)*	21500
32000	36600	2695	45,4	3200	3350	1700	5280	80	500	-	8385 (8670)*	8885 (9170)*	28400
32000	36670	2750	46,2	3400	3550	1700	4875	80	500	-	7980 (8265)*	8480 (8765)*	28650
40000	44650	3285	55,2	3400	3550	1700	5795	80	500	-	8975 (9260)*	9475 (9760)*	34500
40000	44700	3320	55,6	3600	3750	1800	5365	80	500	-	8545 (8830)*	9045 (9330)*	34900

**Dimensions in brackets are valid for drive type S*

Nominal capacity	Nozzles (DN) N1	N2 N10	N3 N6	N4 N9	N5 N7	N8	N11 N14	N12 N15	D	NL1	NL2	d1	d2	d3	Drive total headroom type	Mt max. Nm	Pn
l																	kW
630	320/420	100	-	100	-	100	50	-	100	1720	1040	–	–	–	250	490	3
1000	350/450	100	100	100	200	-	50	-	100	1970	1200	22,5°	47,5°	28°	250 K	550	
1600	350/450	100	100	100	200	-	50	50	100	2285	1200	30°	45°	28°	300 K (S)*	1100	
2500	500	100	100	100	200	-	50	50	100	2540	1420	25°	45°	28°	300 K (S)*	1100	
4000	500	150	150	150	250	-	50	50	100	2980	1800	25°	45°	28°	400 K (S)*	2100	
6300	500	150	150	150	250	-	80	80	150	3595	2320	30°	45°	28°	500 K (S)*	2100	
8000	600	150	150	150	300	150	80	80	150	3515	2500	12,5°	40°	28°	500 K (S)*	2100	
10000	600	200	200	250	250	200	80	80	150	3790	2500	7,5°	35°	28°	700 K (S)*	6000	
12500	600	200	200	250	250	200	80	80	150	4390	3100	7,5°	35°	28°	700 K (S)*	6000	
16000	600	200	200	250	250	200	80	80	150	4690	3400	7,5°	35°	62°	700 K (S)*	6000	
16000	600	200	200	300	300	200	80	80	150	4310	3100	12,5°	40°	62°	700 K (S)*	6000	
20000	600	200	200	300	300	200	80	80	150	4990	3700	12,5°	40°	62°	700 K (S)*	6000	
25000	600	200	200	300	300	200	80	80	150	5840	4550	12,5°	40°	62°	700 K (S)*	6000	
25000	600	200	200	300	300	200	80	80	150	5360	4000	12,5°	40°	62°	700 K (S)*	6000	
32000	600	200	200	400	400	200	100	100	150	5955	4500	12,5°	40°	62°	900 K (S)*	9100	
32000	600	200	200	400	400	200	100	100	150	5545	4000	12,5°	40°	62°	900 K (S)*	9100	
40000	600	200	200	400	400	200	100	100	150	6465	4900	12,5°	40°	62°	900 K (S)*	9100	
40000	600	200	200	400	400	200	100	100	150	6035	4500	12,5°	40°	62°	900 K (S)*	9100	

Tolerances acc. to DIN 28006 – part 2

We would like to advice you regarding the advantages of glass lined equipment like:

- Glass lined reactors acc. to DIN 28136
- Glass lined Pharma Reactors
- Comonents for pharmaceutical and high purity applications
- Mixing technology for pharmaceutical and chamical industry
- Reactors for Polymerization
- Storage Tanks and Receivers
- Columns
- Heat Exchangers
- Sensor technology
- Accessories

www.thaletec.com

THALETEC ALL AROUND SERVICE

24-h-Hotline:
+ 49 (0) 39 47 / 778 111

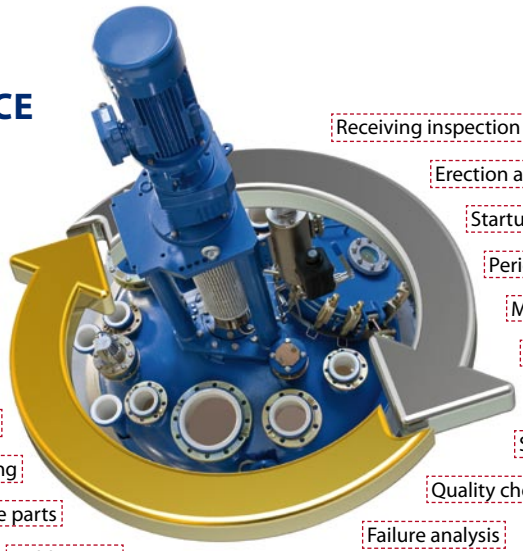

Receiving inspection
Erection and Installation
Startups
Periodic inspections
Maintenance
Galss repairs
Retrofit
Service contracts
Quality checks
Failure analysis
Process optimization
Field servies
Spare parts
Reglassing
Seminars and trainings
Disassemblies
Used equipment

THALETEC GmbH

Steinbachstraße 3
D - 06502 Thale

Telephone:
+ 49 (0) 3947-778 0
Facsimile:
+ 49 (0) 3947 778 110

service@thaletec.com
www.thaletec.com

THALE

k005 03E 02/2011