Bottom Discharge Centrifuge

TM model

For the efficient separation of solids and liquids in a single sealed environment
Fine chemicals – Active Pharmaceutical Ingredients (API)

Fully inspectable version (TM/GMP)

COMI CONDOR S.p.A. - ***Centrifuge technology since 1920***

I – 20019 SETTIMO MILANESE (MI) - Via A. Volta, 6 - ITALIA – Phone +39 02 3357991 - Fax +39 02 33500439

visit www.comicondor.com or ask comi-comm@comicondor.com for details

Bottom Discharge Centrifuge Design & Specifications

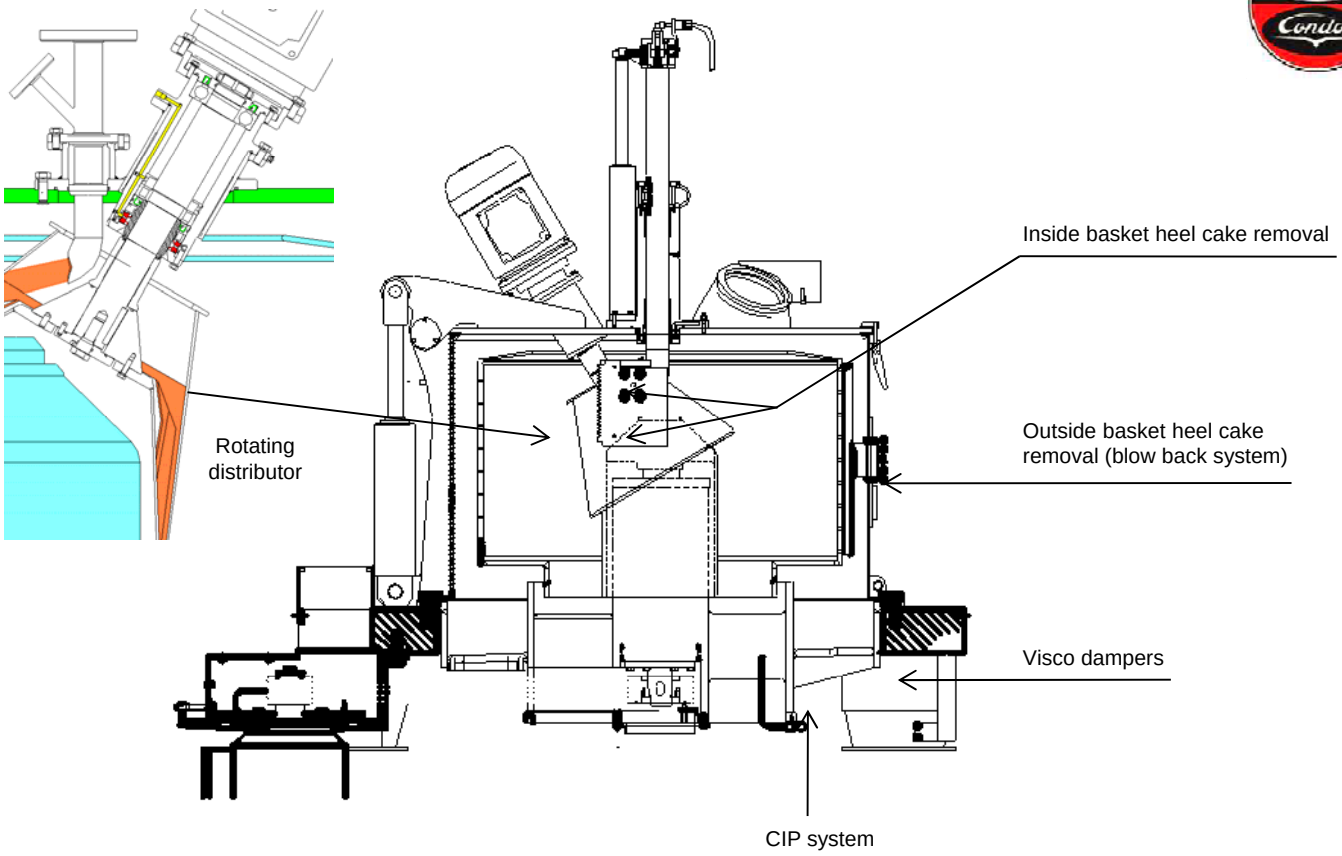

FIELD OF APPLICATION AND CHARACTERISTICS

- production of chemical and bulk pharmaceutical products from synthesis processes
- product requiring a large filtering area
- suitable for toxic and flammable products, where avoidance of contacts between product and operator is mandatory
- the centrifuge may be constantly kept under inert atmosphere with a small overpressure, as per DIN 24400, 400 mm WC
- filter cloth mounted into the basket by rings; replacement is very easy and quick
- rotating distributor for feeding and washing allowing a uniform cake distribution which avoids unbalance
- construction materials: aisi 316L(DIN 1.4404), Hastelloy C, Titanium, 904L, or others
- surface coating: Halar, ETFE
- mirror like or electrochemical polishing are also available
- relatively limited horizontal space required
- suspension can be on three columns or on inertia base on elastic dampers, which transfer low dynamic loads to the foundations
- actuation of the basket and of the optional rotating cone by electric motors with frequency converters. Knife and cover opening are hydraulically operated
- the lubrication is by grease for every model
- high level FDA qualification documentation to complete the plant FDA qualification book

CONTROL OPTIONS

- complete PLC controls with touch screen interface
- switch between automatic and manual operation
- variable frequency drive (VFD) speed control
- ATEX electrical enclosures
- optional instrumentation integrated into the control system including oxygen monitoring, temperature, pressure, liquid feed flow, N_2 purge flow, effluent particle detection and fluid clarity

AFTER-MARKET SUPPORT

- field service & technical support available 24/7
- mechanical and electrical parts
- process control and maintenance manuals
- certifications and construction documentation
- mechanical and electrical upgrades

Centrifuge Model TM	*Units*	800/ 250	800/ 400	1000/ 500	1000/ 630	1250/ 700	1250/ 800	1600/ 800	1600/ 1000	1700/ 1190	1850/ 1250
Basket diameter	*mm*	800	800	1000	1000	1250	1250	1600	1600	1700	1850
Basket length	*mm*	250	400	500	630	700	800	800	1000	1190	1250
Filtering surface	*m2*	0.63	1.01	1.57	1.98	2.75	3.14	4.02	5.03	6.3	7.26
Cake volume	*dm3*	63	100	200	250	400	500	820	1025	1377	1710
Slurry density	*kg/dm3*	1.25	1.25	1.25	1.25	1.25	1.25	1.25	1.25	1.25	1.25
Maximum load	*kg*	79	125	250	312	500	625	1025	1280	1721	2140
Maximum speed	*RPM*	1650	1500	1200	1200	1000	1000	900	900	850	800
G-factor xg	*G*	1216	1006	805	805	700	700	724	724	686	643
Centrifuge weight	*kg*	1500	2000	4100	4250	6400	6700	12,000	13,000	14,500	16,500

MORE DETAILED INFO ON WEB SITE WWW.COMICONDOR.COM