CATALOGUE

Centrifuges for the **Pharmaceutical Industry**

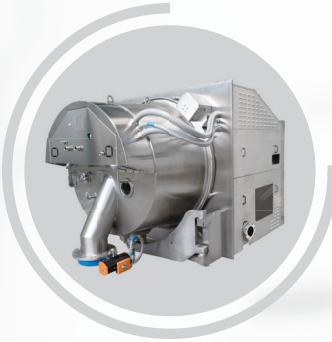

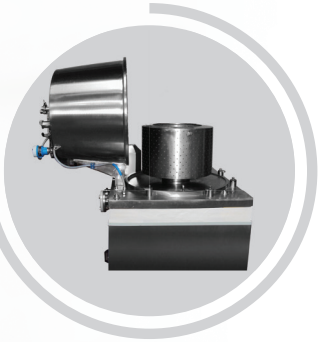

Centrifuges for the **Chemical Industry**

Centrifuges for the **Starch Industry**

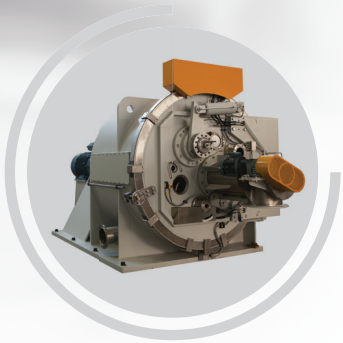

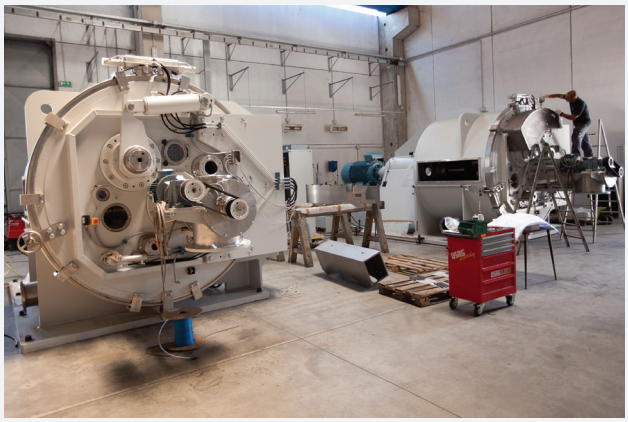

COMI CONDOR CENTRIFUGES

One Century of Research and Technology

Since 1920, the Compay has grown consistently to reach its present position of leadership in the Italian and world markets in the field of pharmaceutical and chemical filtering centrifuges.
COMI CONDOR has two sites: one in Settimo Milanese (Milano) and the other in S. Cristina (Pavia), with a total of 70 employees.
The Settimo Milanese site includes offices: sales, financial, purchasing and technical departments.

The S.Cristina factory covers more than 6000 m^2 with a total site area of 40,000 m^2. This factory houses all the departments for the production, assembly and testing of centrifuges.

Several CNC machines, high pressure water cutting center and a modern welding area, including polishing section, allow a high quality controlled in house production.
In 1999 the company was awarded ISO 9001 certification.

COMI CONDOR

your specialist in centrifugation technology:

- *customized design based on project-related requirements*
- *complete engineering and production in own facilities*
- *continuous product development/innovation*

OUR PRODUCTION INCLUDES THE FOLLOWING RANGE OF MACHINES:

- HX model, GMP peeler centrifuge (Pharma)
- HT model, GMP inverting filter centrifuge (Pharma)
- TM model, bottom discharge centrifuge (Pharma and Chemical)
- ALFA model, top discharge centrifuge (Pharma and Chemical)
- HX/L/S model, siphon peeler centrifuge (Starch and Chemical industry)

AFTER-MARKET SUPPORT

- field service & technical support available 24/7
- mechanical and electrical parts
- process control and maintenance manuals
- certifications and construction documentation
- mechanical and electrical upgrades

PHARMA PEELER CENTRIFUGE

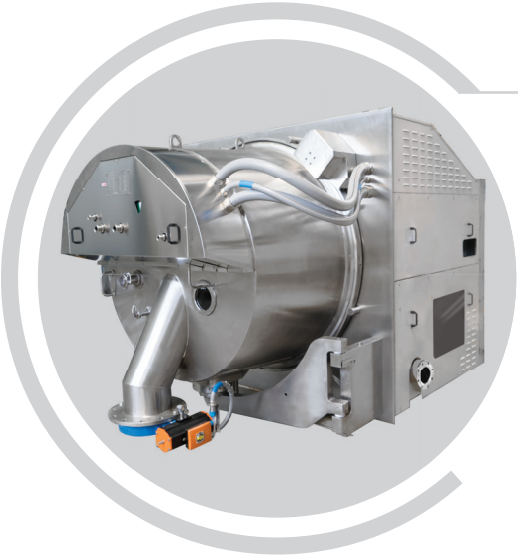

HX/GMP MODEL

For the efficient separation of solids and liquids in a single sealed environment. Fine chemicals – Active Pharmaceutical Ingredients (API)

PROCESS ADVANTAGES

- through the wall installation
- horizontal basket assures even loading of cake
- filter medium is easily changed and secured in the basket
- polypropylene or PTFE filters of various weaves and sizes
- cGMP design eliminate most threaded internal parts
- access to all areas including rear of basket and shaft seal
- complete CIP spray coverage
- peeler knife with chute protection
- "heel" removal assist with optional reverse blow black
- laser cake detector (external to the process chamber)
- steep solids discharge chute (30° from vertical)
- pressure tight to 400 mm H2O (0.6 psig)
- inert gas purging
- contact materials: 316L, Hastelloy, 904 L
- surface coating: Halar, ETFE
- high level FDA qualification documentation to complete the plant FDA qualification book

CONTROL OPTIONS

- complete PLC controls with touch screen interface
- switch between automatic and manual operation
- variable frequency drive (VFD) speed control
- ATEX electrical enclosures
- optional instrumentation integrated into the control system including oxygen monitoring, temperature, pressure, liquid feed flow, N2 purge flow, effluent particle detection and fluid clarity

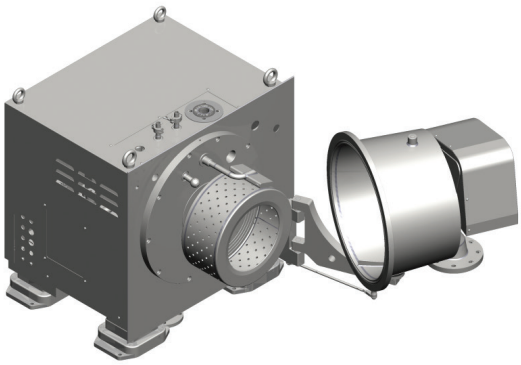

Centrifuge Model: HX/GMP	Basket diameter	Basket length	Filtering surface	Cake volume	Max load	Max speed	G factor	Centrifuge weight	Solid chute slope
Units	mm	mm	m^2	dm^3	kg	RPM	xg	kg	°vs vertical
650/280	650	280	0,57	42	53	2300	1922	3700	30
850/380	850	380	1,01	90	112	1850	1626	5600	30
1030/500	1030	500	1,62	165	207	1500	1295	7600	30
1150/500	1150	500	1,81	222	278	1400	1260	9600	30
1300/610	1300	610	2,49	340	425	1200	1046	13000	30
1450/730	1450	730	3,32	486	607	1150	1072	16500	34
1600/800	1600	800	4,02	733	916	950	807	22000	36
1750/920	1750	920	5,05	991	1239	900	792	34000	37

INVERTING FILTER CENTRIFUGE

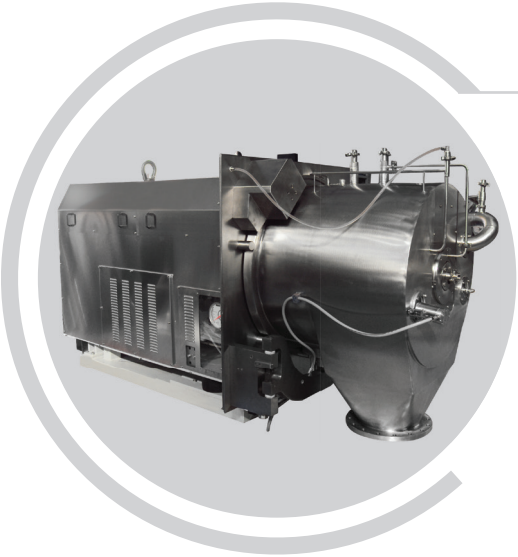

HT/GMP MODEL

High Recovery Solid/Liquid Separation in a single sealed environment
Suitable for compressibleand difficultto filtrate cakes.
Fine chemicals – Active Pharmaceutical Ingredients (API)

ADVANTAGES

• **Gentle:** Solids discharge is performed by inverting the filter cloth and spinning the product off centrifugally. No discharge blade means that delicate crystals can be recovered without breakage.
• **High yield - Low residual:** High yield is achieved because the solids are discharged immediately by the inversion of the spinning filter and high centrifugal force. Because solids are discharged without the use of a blade or blowback, ultra-thin cake can be processed efficiently.
• **Improved C.I.P. & Validation:** There are two (2) moving parts (filter, basket insert) inside the Inverting Filter Centrifuge. Crevices, seals and the additional surface area associated with the discharge blade, feed pipe, wash pipe and cake measure are eliminated.
• **Drying capability:** Removal of bound moisture is achieved by dry or heated gas at up to 6 barg differential pressure across the cake. (HYPERBARIC CENTRIFUGATION SYSTEM – HCS)

DESIGN FEATURES

• batch capacity from 7 l to 210 l
• high filtering capability with force of 1018 to 1663 gravities
• horizontal basket design ensures uniform load
• polypropylene or PTFE filter cloth
• outer housing is gas tight to 400 mm H2O
• inertia pad with dampers allows installation directly on floor
• through-the wall installation
• shafts and bearings serviceable from the back side leaves the process area free from contamination
• electro/mechanical filter cloth inversion; bearings grease lubricated (oil free execution)
• all process surfaces can be visually inspected
• clean in place design
• available in 316L stainless steel, Hastelloy & other exotic alloys
• all grades of surface finish available
• high level FDA qualification documentation to complete the plant FDA qualification book

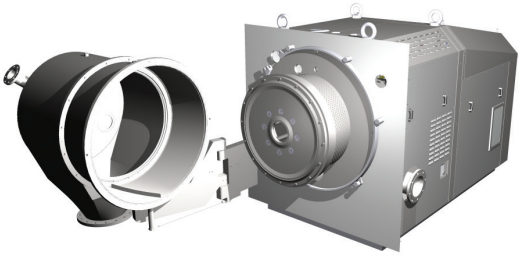

CONTROL OPTIONS

• complete PLC controls with touch screen interface
• switch between automatic and manual operation
• variable frequency drive (VFD) speed control
• ATEX electrical enclosures

Centrifuge Model: HT/GMP	Basket diameter	Basket length	Filtering surface	Cake volume	Slurry density	Max basket load	Max basket speed	G factor	Centrifuge weight
Units	mm	mm	m^2	dm^3	kg/dm^3	kg	RPM	xg	kg
600/225	600	225	0,45	52	1,25	65	2000	1340	4000
700/225	700	225	0,52	65	1,25	81	1850	1338	4600
800/350	800	350	0,90	122	1,25	152	1600	1144	8500
900/350	900	350	1	145	1,25	181	1500	1131	8700
1000/430	1000	430	1,35	210	1,25	262	1350	1018	9400

BOTTOM DISCHARGE CENTRIFUGE

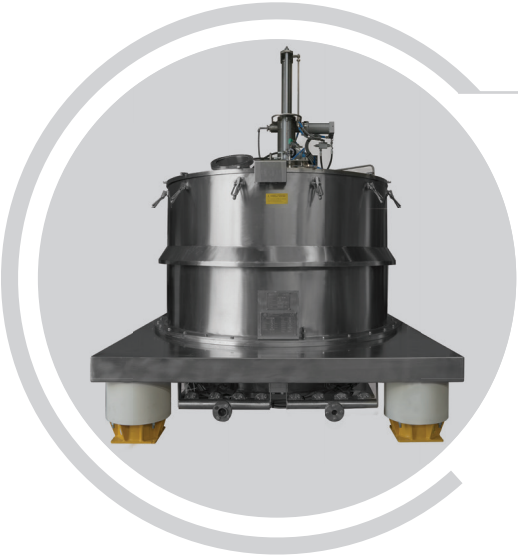

TM MODEL

For the efficient solids/liquids separation in a single sealed environment
Chemicals – Active Pharmaceutical Ingredients (API)

FIELD OF APPLICATION AND CHARACTERISTICS

- production of chemical and bulk pharmaceutical products from synthesis processes
- product requiring a large filtering area
- suitable for toxic and flammable products, where avoidance of contacts between product and operator is mandatory
- the centrifuge may be constantly kept under inert atmosphere with a small overpressure, as per DIN 24400, 400 mm WC
- filter cloth mounted into the basket by rings; replacement is very easy and quick
- rotating distributor for feeding and washing allowing a uniform cake distribution which avoids unbalance
- construction materials: AISI 316L(DIN 1.4404), Hastelloy C, Titanium, 904L, or others
- surface coating: Halar, ETFE
- mirror like or electrochemical polishing are also available
- relatively limited horizontal space required
- suspension can be on three columns or on inertia base on elastic dampers, which transfer low dynamic loads to the foundations
- actuation of the basket and of the optional rotating cone by electric motors with frequency converters. Knife and cover opening are hydraulically operated
- the lubrication is by grease for every model
- high level FDA qualification documentation to complete the plant FDA qualification book

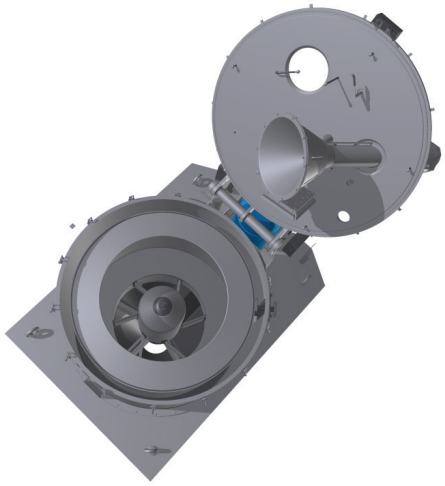

CONTROL OPTIONS

- complete PLC controls with touch screen interface
- switch between automatic and manual operation
- variable frequency drive (VFD) speed control
- ATEX electrical enclosures
- optional instrumentation integrated into the control system including oxygen monitoring, temperature, pressure, liquid feed flow, N2 purge flow, effluent particle detection and fluid clarity

Centrifuge Model: TM	Basket diameter	Basket length	Filtering surface	Cake volume	Maximum load	Maximum speed	G factor	Centrifuge weight
Units	mm	mm	m^2	dm^3	kg	RPM	xg	kg
800/250	800	250	0,63	63	79	1650	1216	1500
800/400	800	400	1,01	100	125	1500	1006	2000
1000/500	1000	500	1,57	200	250	1200	805	4100
1000/630	1000	630	1,98	250	312	1200	805	4250
1250/700	1250	700	2,75	400	500	1000	700	6400
1250/800	1250	800	3,14	500	625	1000	700	6700
1600/800	1600	800	4,02	820	1025	900	724	12,000
1600/1000	1600	1000	5,03	1025	1280	900	724	13,000
1700/1190	1700	1190	6,3	1377	1721	850	686	14,500
1850/1250	1850	1250	7,26	1710	2140	800	643	16,500

VERTICAL AXIS TOP DISCHARGE CENTRIFUGE

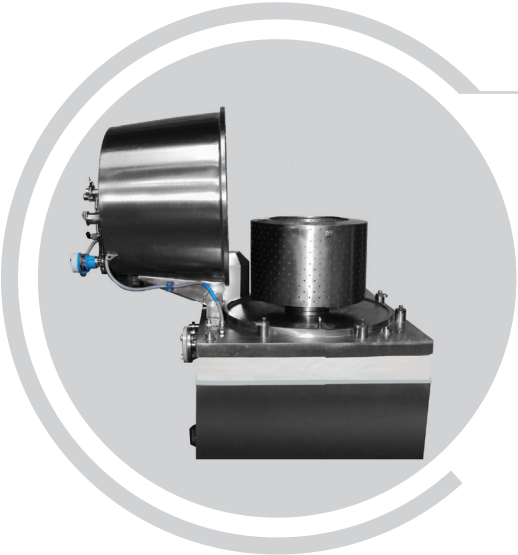

ALFA MODEL

For the efficient solids/liquids separation.
Fine chemicals – Active Pharmaceutical Ingredients (API).

OPERATION

• the COMI CONDOR vertical axis basket centrifuge type ALFA is a batch filtering centrifuge with product discharge from the top (different systems are available).
• ALFA/B dig out discharge by shovel
• ALFA/SB lifting bag system

CONSTRUCTION MATERIALS

• The available materials of construction are:
AISI 316L, Hastelloy, Titanium, Halar coating and others.

CONTROL OPTIONS

• complete PLC controls with touch screen interface
• switch between automatic and manual operation
• variable frequency drive (VFD) speed control
• ATEX electrical enclosures
• optional instrumentation integrated into the control system including oxygen monitoring, temperature, pressure, liquid feed flow, N2 purge flow, effluent particle detection and fluid clarit

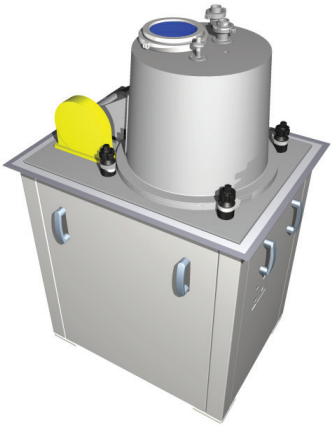

OPTIONS

• special lifting bag system for quick removal of filter bag
• C.I.P. system
• glove box operation (high containment)
• GMP version: process area completely inspectable, flat basket bottom (fully openable casing)
• scraping knife with vacuum product discharge
• installation: 3 columns or inertia plate with viscodampers
• cake detector for automatic loading without operator intervention
• metallic syntered screen for microfiltration (down to 2 microns)
• a system for dissolving the cake "in situ" avoiding the classic solids discharge phase is available

Centrifuge Model: ALFA	Basket diameter	Basket length	Filtering surface	Cake volume	Max basket load	Max basket speed	G factor	Centrifuge weight
Units	mm	mm	m^2	dm^3	kg	RPM	xg	kg
630/400	630	400	0,8	63	80	1900	1250	1500
800/400	800	400	1,00	100	125	1500	1000	2900
1000/500	1000	500	1,57	200	250	1200	800	4000
1250/500	1250	500	1,96	315	400	1000	700	5300
1250/630	1250	630	2,47	400	500	1000	700	6000
1250/800	1250	800	3,14	500	625	1000	700	6500
1600/800	1600	800	4,02	800	1000	850	646	8000

CHEMICAL PEELER CENTRIFUGE

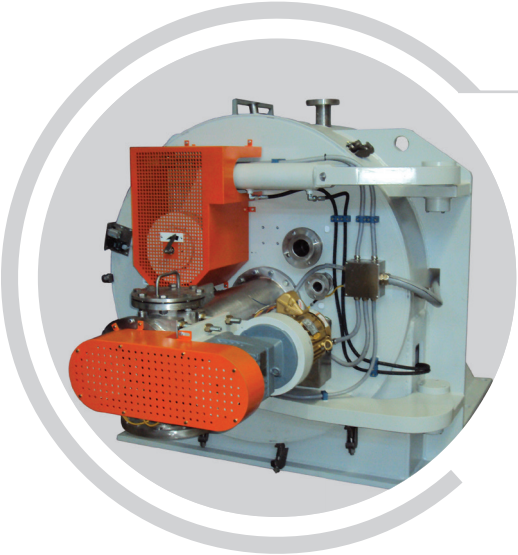

HX MODEL

For the efficient solids/liquids separation in a single sealed environment.
For chemical applications.

PROCESS ADVANTAGES

- rotary siphon or standard filtration basket
- back wash
- horizontal basket assures even loading of cake
- filter medium is easily changed and secured in the basket
- polypropylene or Halar or peek or metallic filters of various weaves and sizes
- cake peeling at full speed
- "heel" removal assist with optional reverse blow black
- solids discharge chute or screw
- pressure tight to 400 mm H2O (0.6 psig)
- inert gas purging
- contact materials: 316L, Hastelloy, Duplex...
- surface coating: Halar, ETFE

CONTROL OPTIONS

- complete PLC controls with touch screen interface
- switch between automatic and manual operation
- variable frequency drive (VFD) speed control
- ATEX electrical enclosures
- optional instrumentation integrated into the control system including oxygen monitoring, temperature, pressure, liquid feed flow, N2 purge flow, effluent particle detection and fluid clarity

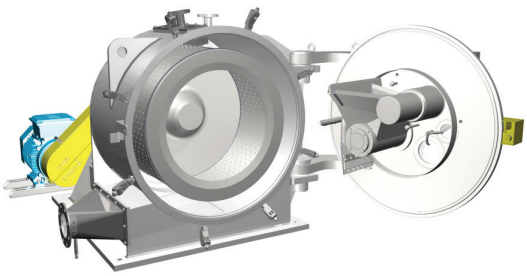

Centrifuge Model: HX	Basket diameter	Filtering Surface	Cake Volume	Max Load	Max Speed	G factor	Weight with no motor	With inertia base and motor
Units	mm	sqm	dm^3	kg	RPM	xg	kg	kg
500/150	500	0.24	15	19	2,700	2,037	650	1,700
650/180	650	0.37	27	34	2,400	2,093	1,400	3,100
650/320	650	0.65	48	60	2,400	2,093	1,550	3,800
850/400	850	1.06	96	120	1,900	1,715	2,750	6,300
850/500	850	1.33	120	165	1,900	1,715	3,200	7,600
1000/500	1000	1.57	165	206	1,550	1,343	3,600	12,300
1000/650	1000	2.04	215	269	1,550	1,343	4,200	12,800
1250/650	1250	2.55	346	433	1,300	1,180	6,500	16,000
1300/850	1300	3.47	500	625	1,250	1,135	8,000	21,000
1700/920	1700	4.91	922	1,152	1,030	1,000	14,000	35,500
1700/1150	1700	6.14	1,153	1,440	1,030	1,000	15,500	42,000
1850/1300	1850	7.55	1,520	1,900	985	1003	26,000	58,000
2000/1440	2010	9	2,023	2,528	950	1,000	32,500	70,000
2100/1550	2100	10.2	2,328	2,910	900	950	33,500	73,000

PEELER CENTRIFUGE FOR STARCH

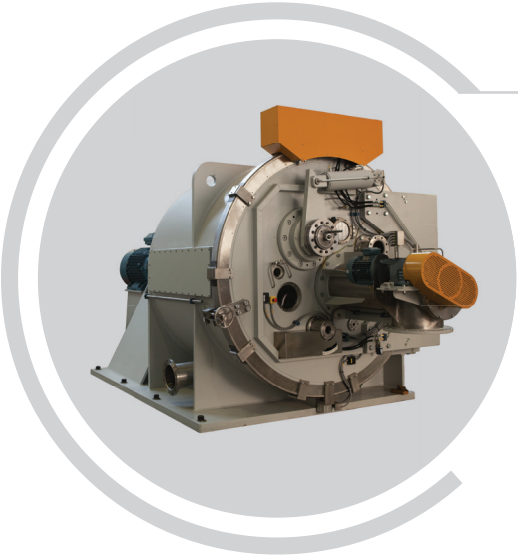

PEELER MODEL HX/L/S

For the efficient separation of starch in a single sealed environment

PROCESS ADVANTAGES

- Rotary siphon
- Front skimming pipe
- Horizontal basket assures even loading of cake
- Filter medium is easily changed and secured in the basket
- Polypropylene filter cloths of various weaves and sizes
- Cake peeling at full speed
- "Heel" regeneration with back wash
- Lower residual moisture
- Automatic "clean in process" of the knife to prevent product blockage
- Automatic sanification of the filter cloth
- Automatic clamping ring for comfortable and quick front door opening
- Concrete or carbon steel inertia block foundation
- Viscodampers are used to reduce dramatically the dynamic forces
- Engineered design that ensures very low vibrations and noise level
- Automatic C.I.P. with "washing machine effect" and spray nozzles

CONTROL OPTIONS

- complete PLC controls with touch screen interface
- switch between automatic and manual operation
- variable frequency drive (VFD) speed control

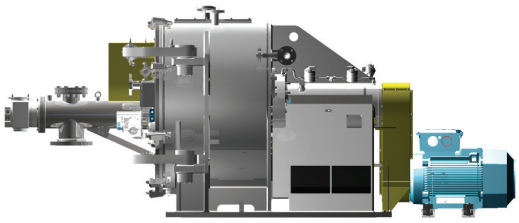

Centrifuge Model: HX / L / S	Basket diameter	Filtering Surface	Cake Volume	Max Load	Max Speed	G Factor	Weight with no motor	With inertia base and motor
Units	mm	sqm	dm^3	kg	RPM	xg	kg	kg
1250/650	1250	2.55	346	484	1,300	1,180	6,500	16,000
1250/800	1250	3.14	426	596	1,300	1,180	8,000	20,000
1300/850	1300	3.47	500	700	1250	1,135	8,500	21,000
1700/920	1700	4.91	922	1,290	1,030	1,000	14,000	35,500
1700/1150	1700	6.14	1,152	1,614	1,030	1,000	15,500	42,000
1850/1300	1850	7.55	1,520	2,130	985	1,003	26,000	58,000
2000/1440	2010	9	2,023	2,832	950	1,000	32,500	70,000
2100/1550	2100	10.2	2,328	3,260	900	950	33,500	73,000

PILOT CENTRIFUGES

ALFA MODEL

Top discharge centrifuge

MAIN FEATURES
- simple operation
- mobile skid mounted
- suitable for scale-up
- cGMP execution

Centrifuge Model: ALFA	Basket diameter	Basket length	Filtering surface	Cake volume	Max basket load	Max basket speed	G factor	Centrifuge weight
Units	mm	mm	m^2	dm^3	kg	RPM	xg	kg
350/260	350	260	0,28	15	20	2800	1532	900
550/350	550	350	0,6	40	50	2550	2000	1200

HX / GMP MODEL

Horizontal peeler centrifuge

MAIN FEATURES
- cGMP execution
- mobile skid mounted
- semiautomatic/automatic operation
- suitable for scale-up and small production

Centrifuge Model: HX/GMP	Basket diameter	Basket length	Filtering surface	Cake volume	Max load	Max speed	G-factor xg	Centrifuge weight	Solid chute slope
Units	mm	mm	m^2	dm^3	kg	RPM	xg	kg	°vs vertical
400/170	400	170	0,21	11	14	3000	2011	1100	30
500/220	500	220	0,35	22	28	2700	2037	2500	30

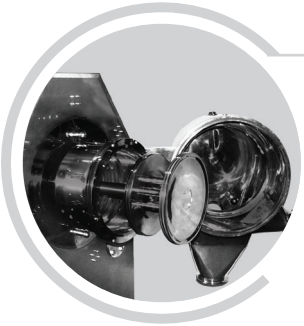

HT /GMP MODEL

Inverting filter centrifuge

MAIN FEATURES
- manual and automatic operation
- mobile skid mounted
- suitable for scale-up
- cGMP execution

Centrifuge Model: HT/GMP	Basket diameter	Basket length	Filtering surface	Cake volume	Slurry density	Max basket load	Max basket speed	G factor	Centrifuge weight
Units	mm	mm	m^2	dm^3	kg/dm^3	kg	RPM	xg	kg
300/110	300	110	0,1	7	1,25	9	3150	1663	1400
470/180	470	180	0,27	27	1,25	34	2300	1390	3000

SITES & CONTACTS

OFFICES

COMI CONDOR S.P.A
Via Volta, 6 – 20019 Settimo Milanese (MI) | Italy
Phone: +39 02 335799.1 **Fax.** +39 02 33500439
Information: comi-info@comicondor.com
Commercial department: comi-comm@comicondor.com
Service department: comi-sec@comicondor.com
Administration: comi-ammin@comicondor.com

PRODUCTION PLANT

Via Po, 27 – 27010 Santa Cristina e Bissone (PV) | Italy
Phone: +39 0382 70356-7 **Fax.** +39 0382 720299

REFERENCES

The world's largest manufacturers of chemical and pharmaceutical products are our customers.

polpharma
IPSEN Innovation for patient care
FAREVA®
BAYER
HELSINN
DOW®
SIGMA-ALDRICH
Abbott
KRKA
pcas more than chemistry
ucb
AstraZeneca
NOVARTIS
Boehringer Ingelheim
Lonza
Roche
BRACCO
QILU PHARMACEUTICAL
janssen
TEVA
SANOFI
CODY LABORATORIES INC.
ESTEVE
Bristol-Myers Squibb
CAMBREX
ori industrie
Chiesi
FIS
GEDEON RICHTER
gsk GlaxoSmithKline
lek
GEM OF THE WEST MANILDRA GROUP
AkzoNobel
NZP
indena®
Zambon 1906
Siegfried
Schering-Plough
Tereos Syral
ROQUETTE
the MENARINI group
Pfizer

COMI CONDOR S.P.A
Via Volta, 6 – 20019 Settimo Milanese (MI) | Italy
Phone: +39 02 335799.1 **Fax.** +39 02 33500439
Info: comi-comm@comicondor.com
www.comicondor.com